Technical Data Sheet

Date: 31/05/2022

tp electric
industrial plugs & sockets

80 x 250 x 70 - Button Box

Ref. No: 3390-825-0600

Pack Unit	Weight
8	930 gr.

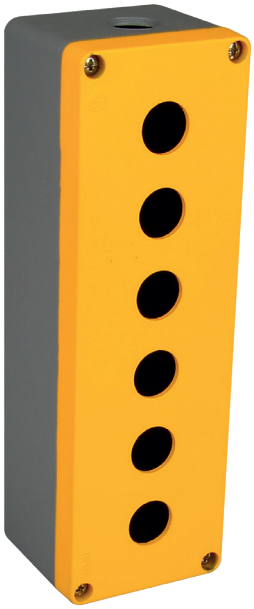

Technical Informations

Number of Button Space	6
Protection Class	IP 67
Housing Material	Aluminum Injection
Screw Material	Stainless Steel INOX
Liquid Foaming	✓
Earth Contact On Base	✓

Dimensions

Kapak / Cover

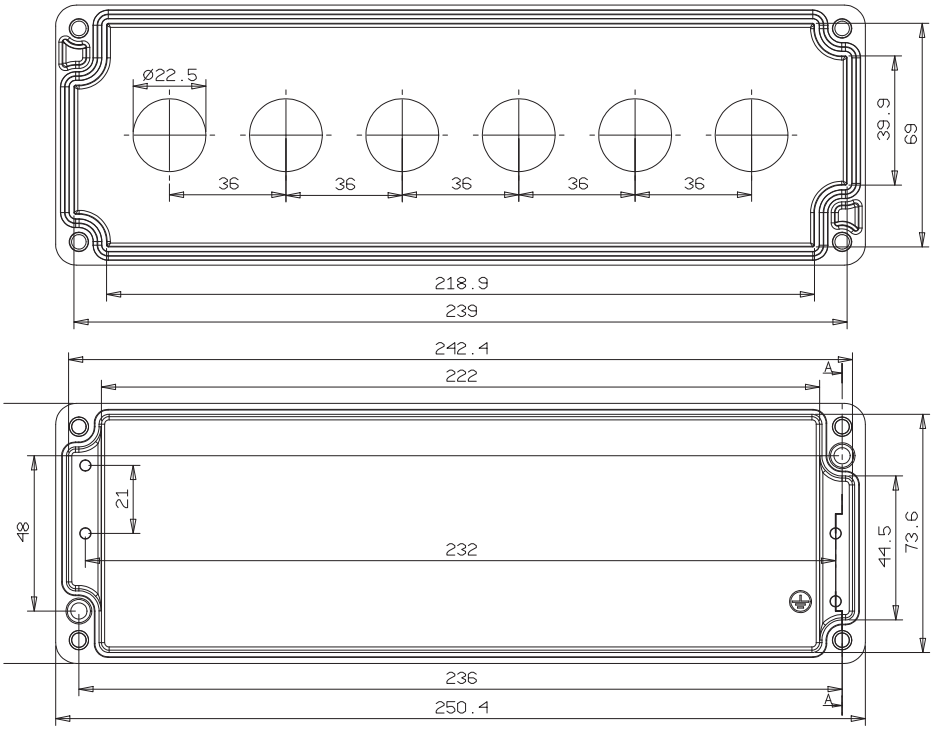

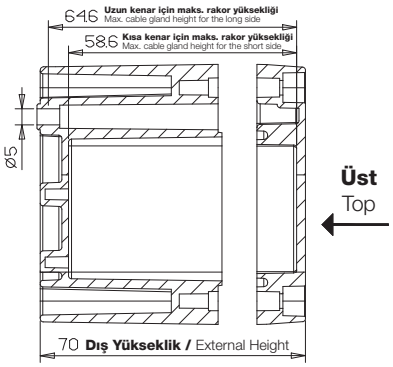

Gövde / Housing

Tel: +90 232 880 90 01
Fax: +90 232 880 90 02

info@tpelectric.com.tr

Kemalpaşa O.S.B. 600 Sk. No:364
35730 Kemalpaşa - İZMİR / TÜRKİYE