Technical Data Sheet

Date: 22/08/2022

100x100x80 Aluminium Enclosure

Ref. No: 3390-801-0600

Pack Unit	Weight
50	489 gr.

Technical Informations

Protection Class	IP 67
Housing Material	Aluminum Injection
Screw Material	Stainless Steel INOX
Liquid Foaming	✓
Earth Contact On Base	✓

Dimensions

Kapak / Cover

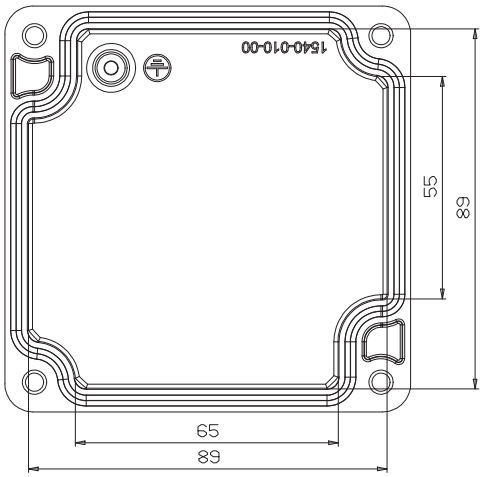

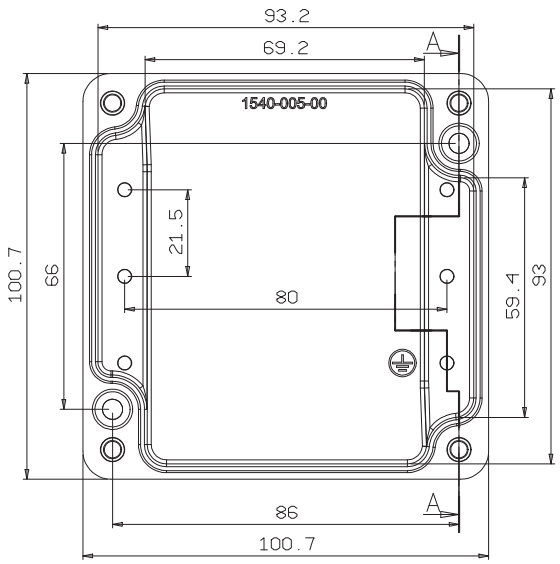

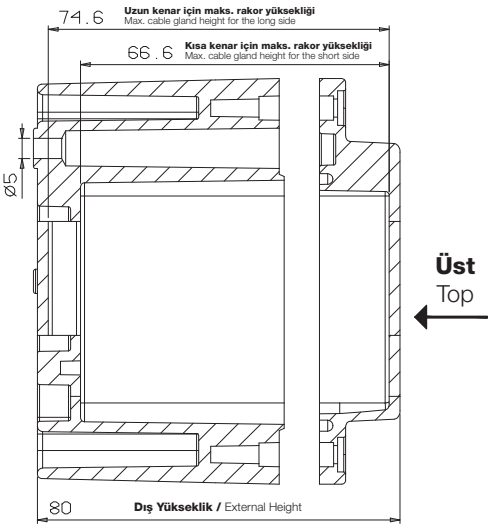

Gövde / Housing

Tel: +90 232 880 90 01
Fax: +90 232 880 90 02

info@tpelectric.com.tr

Kemalpaşa O.S.B. 600 Sk. No:364
35730 Kemalpaşa - İZMİR / TÜRKİYE